Russell Hobbs

Cooker Hood
Instruction Manual

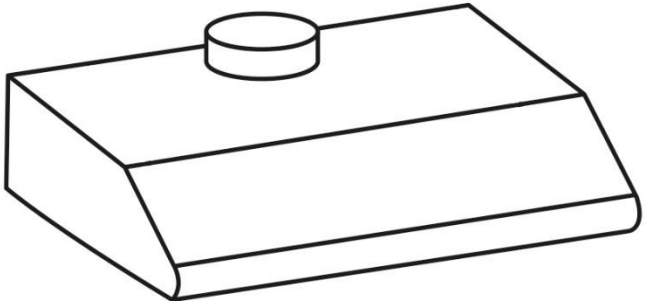

Model number(s):
RHVSRCH602SS-M/B-M

For Customer Services & Spare Parts please call **0345 208 8750**
or visit us at **mda.russellhobbs.com**

IMPORTANT:
RETAIN FOR FUTURE REFERENCE

Contents

Safety Instructions	.....	3-6
Product Overview	.....	7
Positioning	.....	8
Operating modes	.....	9
Venting modes	.....	10
Installation	.....	11-12
Usage	.....	13
Cleaning and Maintenance	.....	14-19
Trouble shooting	.....	20
Connection to the mains supply	.....	21
Guarantee	.....	22
Technical specification	.....	23

Safety Instructions

Important note:
Please read this booklet before installing and switching on this appliance. The manufacturer assumes no responsibility for incorrect installation and usage as described in this booklet.

This appliance can be used by children aged from 8 years and above and persons with reduced physical, sensory or mental capabilities or lack of experience and knowledge if they have been given supervision or instruction concerning use of the appliance in a safe way and understand the hazards involved. Children shall not play with the appliance.

- Children should be supervised to ensure that they do not play with the appliance.
- Children must not clean the appliance or carry out general maintenance unless they are at least 8 years old and are being supervised.
- Keep children below the age of 8 years old at a safe distance from the appliance and power cable.
- If the supply lead is damaged it must be replaced by a qualified person using the correct lead, available from **0345 208 8750.**
- The appliance can only be used safely if it is correctly installed according to the safety instructions. The installer is responsible for ensuring that the appliance works correctly after installation.
- This appliance is intended for domestic use and the household environment only. The appliance is not intended for use outside.
- Do not leave the appliance unattended during operation. The manufacturer is not liable for damage which is caused by improper use or incorrect operation.
- Check the appliance for damage after unpacking it. Do not connect the appliance if it has been damaged in transport.
- This appliance is not intended for operation with an external clock timer or a remote control.

Safety Instructions

- Packaging material is dangerous to children. Never allow children to play with packaging material.
- **Risk of Death -** Always ensure adequate fresh air in the room if the appliance is being operated in extraction-air mode at the same time as room air-dependent heat-producing appliance(s) are being operated.
- Room air-dependent heat-producing appliances (e.g. gas, oil, wood or coal operated heaters, continuous flow heaters or water heaters) obtain combustion air from the room in which they are installed and discharge the exhaust gases into the open air through an exhaust gas system (e.g. a chimney).
- In combination with an activated vapour extractor hood, room air is extracted from the kitchen and neighbouring rooms – a partial vacuum is produced if not enough fresh air is supplied. Toxic gases from the chimney or the extraction shaft are sucked back into the living space.
    - Adequate incoming air must therefore always be ensured.
    - An incoming/exhaust air wall box alone will not ensure compliance with the limit.
- Safe operation is possible only when the partial vacuum in the place where the heat producing appliance is installed does not exceed 4 Pa (0.04 mbar). This can be achieved when the air needed for combustion is able to enter through openings that cannot be sealed, for example in doors, windows, incoming/ exhaust air wall boxes or by other technical means.
- In any case, consult your responsible Master Chimney Sweep. They will be able to assess the house's entire ventilation setup and will suggest the suitable ventilation measures to you.

Safety Instructions

- **Risk of Fire -** Grease deposits in the grease filter may catch fire. **Clean the grease filter at least every 2 months.**
- Never operate the appliance without the grease filter.
- Grease deposits in the grease filter may catch fire. Never work with naked flames close to the appliance (e.g. flambéing). Do not install the appliance near a heat producing appliance for solid fuel (e.g. wood or coal) unless a closed, non-removable cover is available. There must be no flying sparks.
- Hot oil and fat can ignite very quickly. Never leave hot fat or oil unattended. Never use water to put out burning oil or fat. Switch off the hotplate. Extinguish flames carefully using a lid, fire blanket or something similar.
- When gas burners are in operation without any cookware placed on them, they can build up a lot of heat. A ventilation appliance installed above the cooker may become damaged or catch fire. Only operate the gas burners with cookware on them.
- Operating several gas burners at the same time gives rise to a great deal of heat. A ventilation appliance installed above the cooker may become damaged or catch fire. Never operate two gas burners simultaneously on the highest flame for longer than 15 minutes. One large burner of more than 5 kW (wok) is equivalent to the power of two gas burners.
- The accessible parts become very hot when in operation. Never touch hot parts. Keep children at a safe distance.
- Components inside the appliance may have sharp edges. Wear protective gloves.
- Items placed on the appliance may fall down. Do not place any objects on the appliance.

Safety Instructions

- A defective appliance may cause electric shock. Never switch on a defective appliance. Unplug the appliance from the mains or switch off the circuit breaker in the fuse box. Contact the after-sales service.
- Incorrect repairs are dangerous. Repairs may only be carried out and damaged power cables replaced by one of our trained after-sales technicians. If the appliance is defective, unplug the appliance from the mains or switch off the circuit breaker in the fuse box. Contact the after-sales service.
- Do not use any high-pressure cleaners or steam cleaners, which can result in an electric shock.
- Always switch on the appliance while cooking to avoid condensation. Condensation can produce corrosion damage.
- Always replace faulty bulbs to prevent the remaining bulbs from overloading.
- Risk of damage due to ingress of humidity into the electronic circuitry. Never clean operator controls with a wet cloth. Surface damage due to incorrect cleaning. Clean stainless steel surfaces in the direction of the grain only. Do not use any stainless steel cleaners for operator controls.
- Surface damage due to strong or abrasive cleaning agents. Never use strong and abrasive cleaning agents. Risk of damage from returning condensate. Install the exhaust duct in such a way that it falls away from the appliance slightly (1° slope).

Product overview

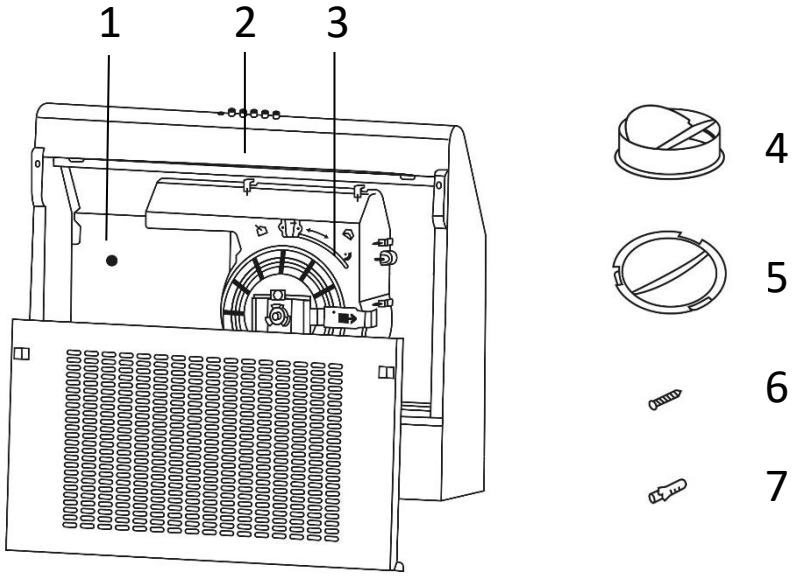

1. Hood
2. Glass visor
3. Venting mode lever
4. Check valve
5. 1 x Air outlet cap
6. 4 x 5mm x 49mm screws
7. 4 x10mm x 43.3mm wall plugs

Unit & Spare Parts

If any of the above parts are missing please contact the customer service team on 0345 208 8750 or visit mda.russellhobbs.com

Russell Hobbs

Positioning

- This appliance is installed on the wall or inside a cupboard.
- Avoid damaging the product during installation
- The appliance can only be used safely if it is correctly installed according to the safety instructions. The installer is responsible for ensuring that the appliance works correct when installed.
- The width of the extractor hood must correspond at least with the width of the hob.
- For the installation, observe the currently valid building regulations and the regulations of the local electricity and gas suppliers.
- When conveying the exhaust air, official and legal regulations (e.g. state building regulations) must be followed.
- The exhaust air must not be conveyed into a functioning smoke or exhaust gas flue or into a shaft which is used to ventilate installation rooms that contain heating appliances. If the exhaust air is to be conveyed into a non-functioning smoke or exhaust gas flue, you must obtain the consent of the heating engineer responsible.
- Always ensure adequate fresh air in the room if the appliance is being operated in exhaust air mode at the same time as room air-dependent heat-producing appliance is being operated.

All measurements in the below diagram are in millimetres (mm)

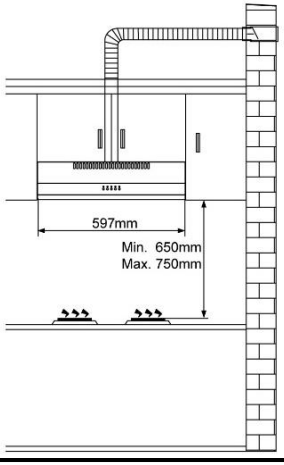

Operating modes

This appliance can be used in extraction-air mode or circulating air mode.

Extraction-air mode
The air which is drawn in is cleaned by the grease filter and extracted outside by a hose.

Important Notes:
- The extracted air must not be extracted into a functioning smoke, exhaust gas flue or into a shaft which is used to ventilate installation rooms which contain heat-producing appliances.
- Before the extracted air is extracted into a non-functioning smoke or exhaust gas flue, obtain the consent of the heating engineer responsible.
- If the extracted air is carried through the outer wall, a telescopic wall box should be used.

Circulating-air mode
The air which is drawn in is cleaned by the grease filters and a carbon filter (carbon filter is not supplied with your appliance) and extracted back into the kitchen.

Important Note: To remove odours in circulating-air mode, you must install a carbon filter (carbon filter is not supplied with your appliance) . Please contact Russell Hobbs or visit the Russell Hobbs website to purchase carbon filter.

Dependent on use it is recommended that a carbon filters are changed every 2 – 3 months.

Venting mode

Extraction-air mode

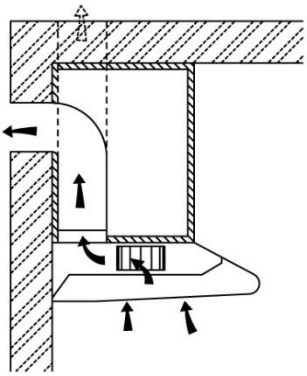

Circulation-air mode

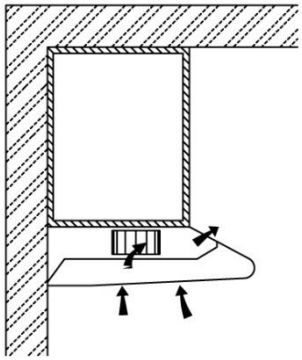

Dependent on the venting mode that is required you may need to change the position of the venting mode level that is situated inside the hoods next to the fan. The lever is held in place with a screw, this will need to be removed before moving the lever and then replaced.

Extraction-air mode: To vent the air outside turn the venting lever to the left.
Circulation-air mode: To recirculate the air turn the venting lever the right.

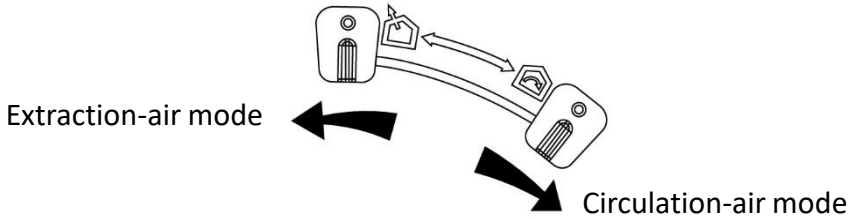

If you choose extraction-air mode, install check valve on the vent hole.

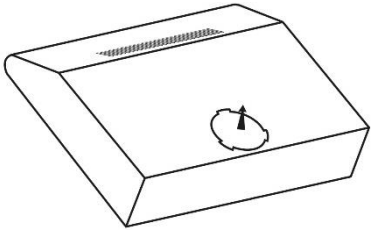

Installation

Preparation

- Ensure that there are no electric wires, gas or water pipes in the area where holes are to be made.
- Ensure that that there is an electrical plug socket within adequate distance of the hood after it has been installed.

Cupboard mounting installation

1. Mark a vertical centre line on the bottom of the cupboard.
2. Mark the positions for the screws and the contour of the cooker.
3. If the cooker hood will be used in extraction mode then drill 1 x 130mm Ø hole in the centre of the bottom of cupboard for the check valve. If it is going to be used in recirculation mode then this is not required.
4. Drill 4 x 3.5mm Ø holes in the bottom of the cupboard, these are for the screws that fix the hood into place.
5. Use the 4 screws to fix the cooker hood to a kitchen cupboard .
6. Check that your fixings are correctly located, by temporarily fitting the cooker hood. If correct, fit the unit into position and tighten the screws if necessary

All measurements in the below diagram are in millimetres (mm)

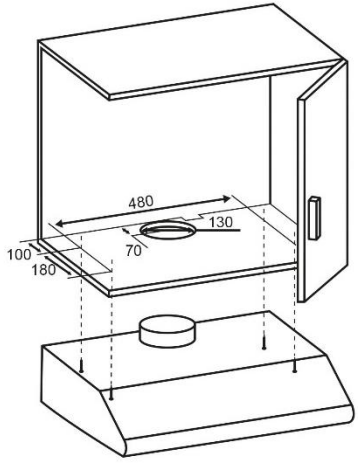

Installation

Wall mounting installation

1. Mark a vertical centre line on the wall from the ceiling to the lower edge of the extractor hood.
2. Mark the contour of the hood and the positions for the screws, ensuring the cooker hood is at a minimum height of 65mm.
3. Drill 2 x 10mm Ø holes to a depth of 50mm, 538mm apart in the wall.
4. Insert 2 plastics wall plugs into the holes
5. Insert 2 screws into the 2 plastic wall plugs and tighten them leaving 3mm protruding from the wall.
6. Mount the cooker hood onto the 2 screws and mark the bottom 2 screw positions.
7. Remove the hood and drill 2 x 10mm Ø holes to a depth of 50mm for the bottom 2 screw holes and insert 2 plastic wall plugs.
Use the 4 screws to fix the cooker hood to a kitchen cupboard .
8. Mount the hood on the top screws, Insert the bottom screws and fully tighten all the screws.

All measurements in the below diagram are in millimetres (mm)

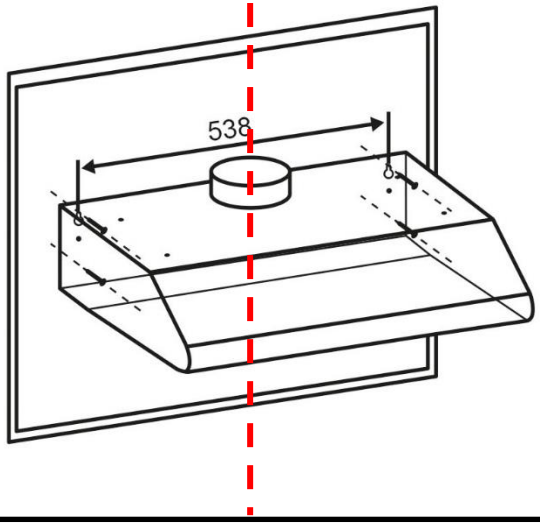

Usage

Note: Switch on the extractor hood when you start cooking and switch it off again several minutes after you have finished cooking. This is the most effective way of removing the kitchen fumes.

Control panel

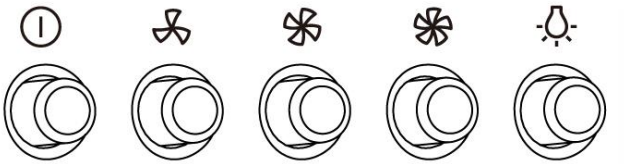

Icon	Explanation
⏻	Fan off
	Fan speed 1 (low)
	Fan speed 2 (medium)
	Fan speed 3 (high)
	Light on & off

The Fan

- Press the fan buttons to set the extraction rate/fan speed that is required.
- Press the fan off button to stop the fan

The Lighting

- The lighting can be switched on and off independently of the fan.
- Press the light button once to turn the lights on and then again to turn the lights off.

Cleaning and Maintenance:

Important notes:

- The appliance will become hot during operation, especially near the bulbs. Allow the appliance to cool down before cleaning.
- Penetrating moisture may result in an electric shock. Clean the appliance using a damp cloth only. Before cleaning, pull out the mains plug or switch off the circuit breaker in the fuse box.
- Do not use any high-pressure cleaners or steam cleaners, which can result in an electric shock.
- Components inside the appliance may have sharp edges. Wear protective gloves.

How to clean

Observe the information in the table on the following page to ensure that the different surfaces are not damaged by using the wrong type of cleaning agent. Do not use:

- Harsh or abrasive cleaning agents,
- Cleaning agents with a high concentration of alcohol,
- Hard scouring pads or sponges,
- High-pressure cleaners or steam cleaners.

Wash new sponge cloths thoroughly before use.

Follow all instructions and warnings included with the cleaning agents.

Cleaning and Maintenance:

Surface type	How to clean
Stainless Steel	Hot soapy water: Clean with a dish cloth and dry with a soft cloth. Clean stainless steel surfaces in the direction of the grain only. Special stainless steel cleaning products are from specialist retailers. Apply a very thin layer of the cleaning product with a soft cloth.
Painted surfaces	Hot soapy water: Clean using a damp dish cloth and dry with a soft cloth/towel. Do not use any stainless steel cleaners.
Aluminium and plastic	Glass cleaner: Clean with a soft cloth.
Glass	Glass cleaner: Clean with a soft cloth. Do not use a glass scraper.
Panel	Hot soapy water: Clean using a damp dish cloth and dry with a soft cloth. Risk of damage to the electronics from penetrating moisture. **Never clean operator controls with a wet cloth.** Do not use any stainless steel cleaners.

Cleaning and Maintenance:

Aluminium grease mesh:

Note: Switch off your hood at the plug socket and unplug it

Removing and installing the Aluminium grease mesh:

Removing

1. Push the clips on the side of the panel inwards to release the panel (shown below) and carefully lower and remove the panel.

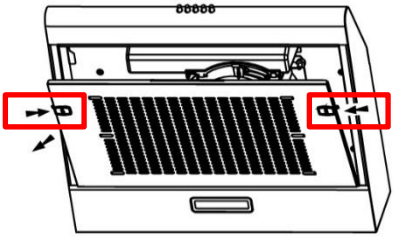

2. Remove the metallic filter from the cooker hood by removing the clips holding it in place.

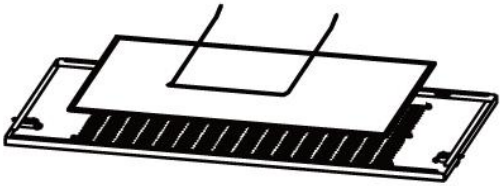

3. Wash the filter in a solution of water and neutral liquid detergent, leaving to soak.
4. Rinse thoroughly with warm water and leave to dry.
5. Once dry replace the filter by reversing the steps 1 and 2.
6. Plug in the hood and turn on the power to the socket.

Note: The metallic filter may alter in colour after several washes. It will still operate correct and does not need to be replaced.

Cleaning and Maintenance:

Carbon filters (must be purchased separately):

Installing the Carbon grease filters:

1. Remove the Aluminium filter mesh from the hood.
2. You will now be able to access the motor, carefully attached the carbon filters to the bottom of the motor.

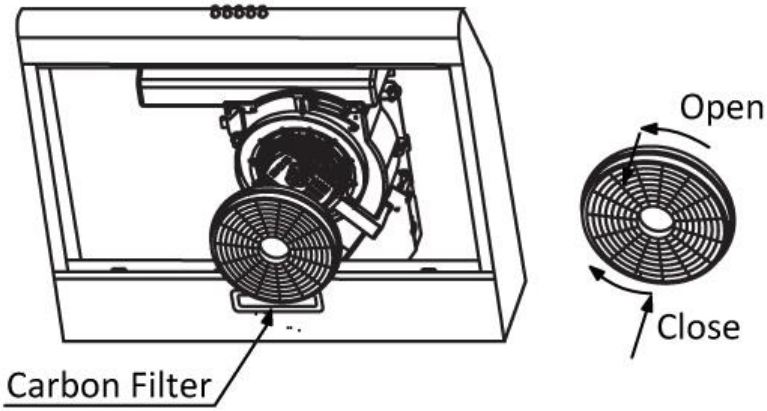

3. Carbon filters should be replaced after approximately 2-3 months of use.
4. The carbon filters cannot be washed or recycled.

Cleaning and Maintenance:

Important notes

- Grease deposits in the grease filter may catch fire.
- Clean the grease filter at least every 2 months.
- Never operate the appliance without the grease filter.
- Do not use any aggressive, acidic or alkaline cleaning agents.
- When cleaning the aluminium grease filters, also clean the holder filters in the hood using a damp cloth (ensure the hood is turned off).
- The filters can be cleaned in the dishwasher or by hand.

Dishwasher:

1. Do not clean heavily soiled metal mesh grease filters together with utensils.
2. Place the aluminium grease filters loosely in the dishwasher.
3. The filters must not be wedged in.
4. The temperature should be 60°C or less

Note: If the filters are cleaned in the dishwasher, slight discolouration may occur. This has no effect on the function of the metal mesh grease filters.

By hand:

1. Soak the aluminium grease filters in a hot soapy water.
2. Clean the filters with a brush before rinsing them thoroughly.
3. Leave the filters to drain and put them back in to the hood when dry.

Cleaning and Maintenance:

Replacing the light modules

- Before changing the light module(s), unplug the appliance from the mains or switch off the circuit breaker in the fuse box.
- Only use a light that is the same type and same power, please contact customer services on 0345 208 8750 or visit mda.russellhobbs.com

Lamp cap	Max Power	Voltage	Image	Lamp cap	ILCOS D code
LED module	1.5W	220V – 240V	Dimensions: (H)33.2mmx(W)120mm	-	DBS-1.5-H-33.2/120

1. Push the clips on the side of the panel inwards to release the panel (shown below) and carefully lower and remove the panel.

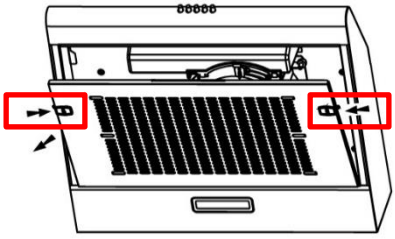

2. Replace the 1.5W LED module (max.1.5W). The reverse steps 1 and 2

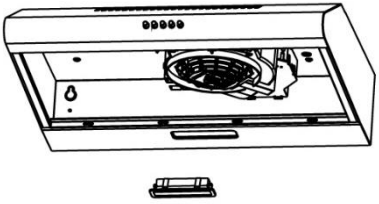

3. Plug in the hood and turn on the power to the socket.

Russell Hobbs

Trouble Shooting:

Problem	Solution
The appliance does not work	The plug is not plugged in. Connect the appliance to the electricity supply.
	Power cut Check whether other kitchen appliances are working.
	Faulty fuse Check in the fuse box to make sure that the fuse for the appliance is working
	The fan is faulty. Contact Russell Hobbs or a local engineer.
The lighting does not work	The plug is not plugged in Connect the appliance to the electricity supply.
	The bulbs are faulty. For information on changing the bulbs, see the "Replacing Bulbs" section.
Excessive vibration	The hood is not correctly installed, check all screws are tightly fastened.
Insufficient suction	The hood may have been installed too far away from the hob.
The hood is not flush against the wall	The screws of the fixing brackets have not been tightened sufficiently.

Russell Hobbs

Connection to the mains supply

WARNING- THIS APPLIANCE MUST BE EARTHED

This appliance is designed to operate from a mains supply of AC220V-AC240V~50Hz. Check that the voltage marked on the product corresponds with your supply voltage.

For UK use only – Plug fitting details (where applicable):
As the colours of the wires in the mains lead of this appliance may not correspond with the coloured markings identifying the terminals in your plug, proceed as follows:

The GREEN/YELLOW wire is the EARTH and must be connected to the terminal which is marked with the letter E or by the earth symbol or coloured GREEN or GREEN/YELLOW.

The BLUE wire is the NEUTRAL and must be connected to the terminal marked with the letter N or coloured BLACK.

The BROWN wire is the LIVE wire and must be connected to the terminal marked with the letter L or coloured RED.

Always ensure that the plug cord grip is fastened correctly.

If a 5A (BS1363) fused plug is used it must be fitted with a 5amp fuse conforming to BS1362 and be BSI or ASTA approved.

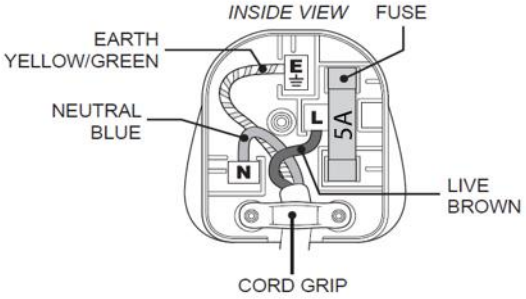

Guarantee

This product is guaranteed for 12 months from the date of the original purchase. If any defect arises due to faulty materials or workmanship you must contact Russell Hobbs with the original proof of purchase so a replacement or refund can be arranged.

Refund or replacement is at the discretion of Russell Hobbs.

The following conditions apply:

- Russell Hobbs will require a valid proof of purchase at the point of replacement or refund.
- The product must be installed and used in accordance with the instructions contained in this instruction guide and any other instructions for use which has been supplied.
- It must be used for domestic purposes only and for its intended use.
- This guarantee does not cover wear and tear, damage, misuse or consumable parts.

This does not affect your statutory rights.

Russell Hobbs

Technical Specification

Model number	**RHVSRCH602SS-M/B-M**
Rated Voltage	220V – 240V ~ 50Hz
Rated input	101.5W
External Dimensions(HxWxD)	140mm x 597mm x 500mm
Maximum extraction rate	200m³/h
Light power	1 x 1.5W LED module

Russell Hobbs

Russell Hobbs

Russell Hobbs is a registered trademark used under license from Spectrum Brands (UK) Ltd. Made under license by G2S Limited, Wigan, WN2 4AY/G2S (NI) Ltd, Belfast, BT5 5AD.

Russell Hobbs Support: call **0345 208 8750** or visit: mda.russellhobbs.com

The ‘wheelie bin’ symbol is known as the 'Crossed-out wheelie bin Symbol'. When this symbol is marked on a product/batteries, it means that the product/batteries should not be disposed of with your general household waste. Only discard electrical/electronic/battery items in separate collection schemes, which cater for the recovery and recycling of materials contained within. Your co-operation is vital to ensure the success of these schemes and for the protection of the environment. For your nearest disposal facility, visit www.recycle-more.co.uk or ask in store for details.

SEDEX – Connecting businesses and their global suppliers to share ethical data and enabling improvement in ethical performance. Visit www.sedex.org.uk for further information.

We reserve the right, due to possible changes to design, to alter the instruction manual without prior notice.

Revision 6