Russell Hobbs

54cm Wide Top Mount Fridge Freezer
Instruction Manual

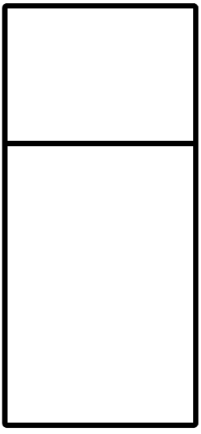

Model number(s):
RH144TMFF54 (B) (C) (G) (R) (S) (W)

For Customer Services & Spare Parts please call **0345 208 8750**
or visit us at **mda.russellhobbs.com**

IMPORTANT:
RETAIN FOR FUTURE REFERENCE

Contents

Safety Instructions	.....	**3 – 5**
Electrical Safety	.....	**6**
Transportation & Handling	.....	**6**
Installing & Switch on your Appliance	.....	**6 - 7**
Before Switching On	.....	**8**
Product Overview	.....	**9**
Unit & Spare Parts	.....	**9**
Usage	.....	**10 - 11**
Temperature Selection	.....	**10 - 11**
Door reversal	.....	**12 - 15**
Replacing the Light	.....	**16**
Food Storage Guidelines	.....	**17**
Freezer Storage Advice	.....	**17**
Energy Saving Advice	.....	**18**
Power Failure	.....	**18**
Maintenance & Cleaning	.....	**19 - 20**
Internal Cleaning	.....	**19**
External Cleaning	.....	**19**
When not in Use	.....	**19**
Defrosting	.....	**20**
Trouble Shooting	.....	**21 - 22**
Connection to the Mains Supply	.....	**23**
Guarantee	.....	**24**
Technical Specification	.....	**25**
Product Fiche	.....	**26**
Notes	.....	**27**

Safety Instructions

Important note: Please read this booklet before installing and switching on this appliance. The manufacturer assumes no responsibility for incorrect installation and usage as described in this booklet.

⚠ **Warning:** When positioning the appliance, ensure the supply cord is not trapped or damaged.

⚠ **Warning:** Do not locate multiple portable socket-outlets or portable power suppliers at the rear of the appliance.

- This model uses natural refrigerant gas as part of its cooling system. This gas is known as R600a (Isobutene) and is environmentally friendly but can be combustible. Care should therefore be taken when handling or transporting the product to ensure that none of the refrigeration circuit components are damaged,
- Do not obstruct ventilation openings in the appliance
- The appliance must not be placed or rested on its power cord.
- Do not use mechanical devices or other artificial means to accelerate the defrosting process, such as a heater or a hair dryer.
- Do not use electrical appliances in the refrigerator compartment of the appliance.
- If this appliance is to replace an old refrigerator with a lock, the lock must be removed as a safety measure before storing it or disposing of it. This is to protect children from locking themselves inside the appliance.
- Old refrigerators and freezers contain insulation gases and refrigerant, they must be disposed of properly. Contact your local authority or your dealer if you have any questions. Please ensure that you do not damage the scrap unit prior to being picked-up by the relevant waste disposal service.
- Do not use plug adaptors, adaptors or extension leads when connecting the appliance to the electrical power supply

- Do not plug in damaged plugs.
- Do not pull, twist or damage the power cable.
- Do not plug-in or un-plug the appliance with wet hands to prevent electrical shock.
- This appliance can be used by children aged from 8 years and above and persons with reduced physical, sensory or mental capabilities or lack of experience and knowledge if they have been given supervision or instruction concerning use of the appliance in a safe way and understand the hazards involved. Children should not play with the appliance.
- Children aged from 3 to 8 years are allowed to load and unload this appliance.
- This appliance is designed to be used by adults, do not allow children to play with the appliance or let them hang over the door.
- Do not place explosive or flammable material in your appliance for your own safety.
- Bottles containing a high percentage of alcohol must be sealed well and placed vertically in the refrigerator.
- Do not cover the body or the top of the appliance
- Fix down the accessories in the appliance during transportation to prevent damage to them.
- This appliance is not intended for use at altitudes exceeding 2000m
- This appliance is intended to be used in household and similar applications such as;
    - Staff kitchen areas in shops, offices and other working environments
    - Farm houses and by clients in hotels, motels and other residential type environments
    - Bed and breakfast type environments;
    - Catering and similar non-retail applications

- To avoid contamination of food, please respect the following instructions
    - Opening the door for long periods can cause a significant increase of the temperature in the compartments of the appliance.
    - Clean regularly surfaces that can come in contact with food and accessible drainage systems.
    - Store raw meat and fish in suitable containers in the refrigerator, so that it is not in contact with or drip onto other food.
    - Two-star frozen-food compartments(if they are presented in the appliance) are suitable for storing pre-frozen food, storing or making ice-cream and making ice cubes.
    - One-, two- and three -star compartments (if they are presented in the appliance) are not suitable for the freezing of fresh food.
    - If the appliance is left empty for long periods, switch off, defrost, clean, dry and leave the door open to prevent mount developing within the appliance.

Electrical Safety

THIS APPLIANCE MUST BE PLUGGED INTO AN EARTHED SOCKET

- Before switching on, make sure that the voltage of your electricity supply is the same as that indicated on the rating plate. This product is designed to operate on 220 – 240V AC; 50Hz. Connection to any other power source may damage the unit.
- This product may be fitted with a non re-wireable plug. If it is necessary to change the fuse in the plug, the fuse cover must be refitted. If the fuse cover becomes lost or damaged, the plug must not be used until a suitable replacement is obtained.
- If the plug has to be changed because it is not suitable for your socket, or becomes damaged in any way, it should be cut off and an appropriate plug fitted following the wiring instructions. This should be carried out by a the manufacturer, service agent or qualified electrician. The plug removed must be disposed of safely, as insertion into a 13 Amp socket is likely to cause an electrical hazard.

Transportation and Handling

For safe lifting, tilt the appliance backwards by no more than 45 degrees, hold the base and rear corners of cabinet. Lift the refrigerator carefully. Never use the door handles for lifting. To move the refrigerator on a flat level surface, tilt it slightly backwards and push backwards.

This unit is heavy and could cause injury – ensure there are adequate people present to move the appliance.

Installing and Switching on Your Appliance

- Operating voltage for your appliance is 220-240V at 50Hz.

- Before plugging in the power supply, ensure that the voltage on the rating label corresponds to the working voltage of your electrical system in your home.
- Insert the plug into an efficient Ground (Earth) connection. If the socket has no Ground (Earth) contact or the plug does not match, we suggest you call an authorised electrician for assistance.
- Place your appliance in an area that is not exposed to direct sunlight.
- Your appliance should be placed at least 10cm away from stoves, ovens and other heating cores.
- This appliance should never be used outdoors or left in the rain.
- When your appliance is placed next to a chest freezer or freezer, there should be at least 10cms between them to prevent humidity on the outer surface.
- Do not place anything on your appliance and install the unit in a suitable place so that there is at least 30cm clearance above the appliance.
- If placing your appliance next to kitchen cabinets, leave 5cm between them.
- The rear of the appliance should be at least 6cm away from the back wall.
- The appliance must be used in the vertical position and on a flat surface.
- To level the appliance, use the adjustable feet on the appliance.
- Do not place your appliance on a carpeted surface as this will prevent adequate ventilation.
- This appliance should only be placed on a flat, firm surface.
- Choose a dry and well-ventilated space.
- The appliance should be positioned so that the plug is easily accessible.
- This appliance is not suitable for use in garages, outbuildings or rooms that do not comply with the ambient temperature requirements set out in the Product Fiche.
- If you need help or are unsure how to install the unit, please contact Customer Services on 0345 208 8750 or visit **mda.russellhobbs.com**.

⚠ **WARNING!** During use, service and disposal of the appliance, please pay attention to symbol similar to the one shown, which is located on rear of appliance (rear panel or compressor) and with a yellow or orange colour. It's risk of fire warning symbol. There are flammable materials in refrigerant pipes and compressor. Please be far away from fire source during use, service and disposal.

Before Switching On

- Before using your appliance, add a teaspoon of bicarbonate of soda to warm water and with a damp cloth wipe down all parts of the new appliance, then repeat the process with a clean damp cloth and dry. **(ensure the appliance is not connected to the power when performing this task).**
- Remove all transport tapes and foam protection pieces. Clean the interior with a cloth dampened in lukewarm soap and water. Wipe with clean water and wipe dry.
- There may be an odour when you first switch on the appliance, it will disappear when the appliance starts to cool.
- Install the plastic distance guide, this is on the condenser pipes (the black pipes) on the rear of the appliance, by turning it 90° (as shown below) to prevent the condenser pipes from touching the wall. The distance between the appliance and back wall must be a **minimum** of 25mm and a **maximum** of 75mm.

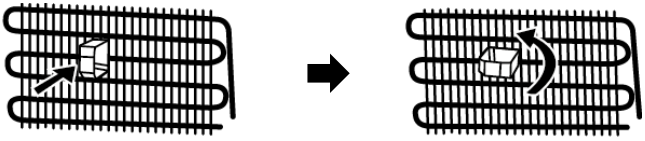

- When the appliance has been positioned, adjust the feet to ensure the unit is stable. This is essential to ensure quiet running and proper door opening/ closing.
- Connect to the electrical socket but do not switch the power to the refrigerator on for at least 3 hours. The coolant within the product needs time to settle after it has been transported and put in to position, failure to do this will affect the cooling performance of your appliance.
- Once the appliance has settled, locate the thermostat dial (this inside the fridge compartment, at the top of the cavity) on the product and set between setting '3' and '4'. Close the door and switch on the power, the compressor will begin to work. Close the door.
- You may hear faint gurgling or bubbling sounds when the refrigerant is pumped to the cooling system and through the coils or tubing at the rear of the appliance. When the compressor is in operation you may hear a slight whirring sound or pulsating noise. The thermostat controls the operation of the compressor, and you may hear a slight click as it cycles in and out (this is normal).
- To save energy, you should minimize the frequency and duration of door opening.

Product Overview

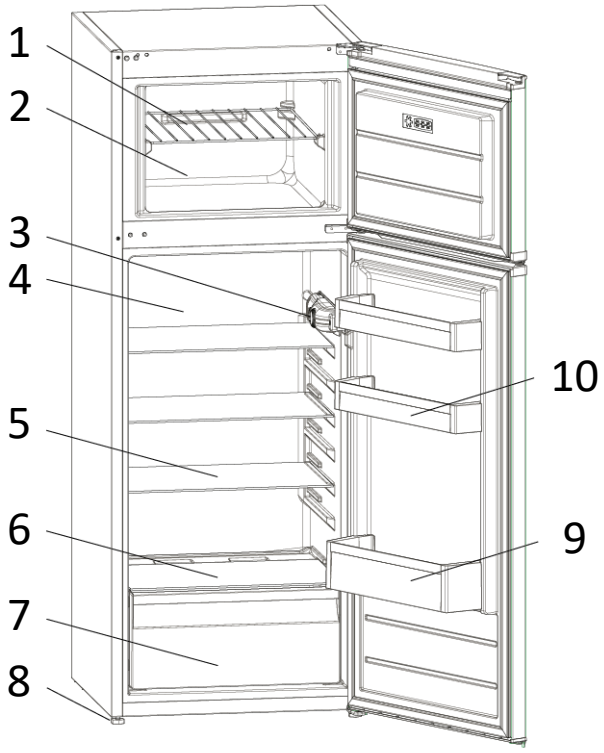

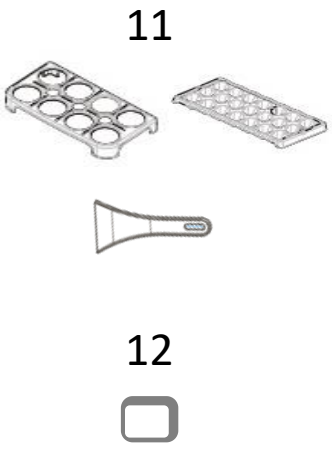

1. Freezer shelf
2. Freezer compartment
3. Thermostat & light
4. Fridge compartment
5. Adjustable shelves
6. Non-adjustable shelf
7. Crisper
8. Adjustable Feet
9. Bottle rack
10. Door racks
11. 1 x egg tray, 1 x ice scraper & 1 x ice cube tray
12. 1 x distance guides (see page 8)

Unit Parts & Spare Parts

Before installation, check that all parts detailed in the product overview are present. If any parts are missing, please contact the Customer Service team on **0345 208 8750** or visit us at **mda.russellhobbs.com**

Usage

Allow to stand for a minimum of 3 hours before plugging in to the mains

The temperature in the appliance is controlled by the temperature control dial or thermostat located inside the fridge. Rotate the control dial up or down to regulate the temperature inside the fridge.

On the temperature control dial, ● is the off setting, 1 is the warmest setting and 5 is the coldest setting. **Under normal conditions for a product used in the majority of UK homes the temperature control should be set between setting 3 and 4.**

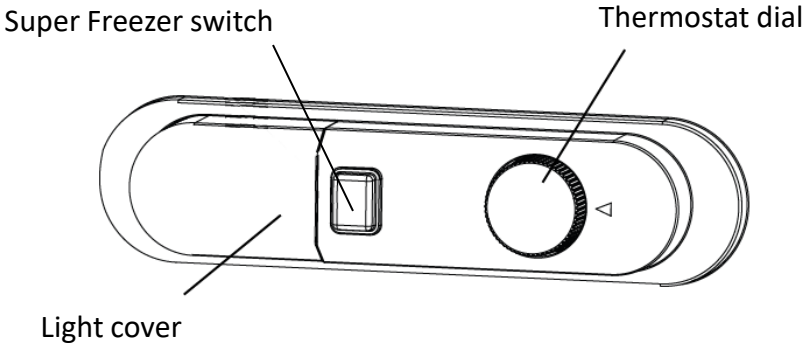

Depending on the ambient temperature of the room the appliance is situated in, you may need to adjust the temperature control dial; in a room with a high ambient temperature (summer) the temperature control dial may need to be adjusted to a colder setting (moved to setting 4 or 5) or in a room with a low ambient (winter) temperature the temperature control dial may need to be adjusted to a warmer setting (moved to setting 2).

Setting the temperature control dial to setting 5 should be used as a rapid cool setting and should only be set for 2 hours before a large amount of food is placed in the fridge. The temperature control should be put back to setting 3 after the food has been placed in the fridge, if this is not done the temperature in the fridge compartment could fall below 0°C as the compressor will run continuously.

Usage

Allow to stand for a minimum of 3 hours before plugging in to the mains

Super Freeze Switch – press this switch to activate the Super Freeze mode.

Super Freeze: Press the switch to activate the Super Freeze. For maximum freezing capacity, please turn on this switch before 24 hours placing fresh food. After placing fresh food in the freezer, 24 hours ON position is generally sufficient. In order to save energy, please turn off this switch after 24 hours from placing fresh food.

Once the temperature control has been set, close the door and plug in the appliance. We recommend that the door is not opened for a minimum of 4 hours to allow the appliance to reach the standard operating temperature.

Note: The standard operating temperature for the fridge compartment should be between 0°C and 4°C and the standard operating temperature for the freezer compartment should be between -18°C and -25°C.

Note: The temperature of the freshly stored food and how often the door is opened affects the temperature in the refrigerator compartment. If required, change the temperature setting.

Door Reversal

You will need to tilt the appliance backward to access the lower hinge which holds screws. Do not tilt more than 45 degrees and do not lay the appliance flat on its side.

For your own safety, a minimum of 2 people should lift or tilt this product.

Tools Required: Cross headed screwdriver and flat headed screwdriver

1. Remove the hinge cover and the screws from the hinge bracket, support the door and remove the hinge and then the door. Place the door on a cushioned surface.

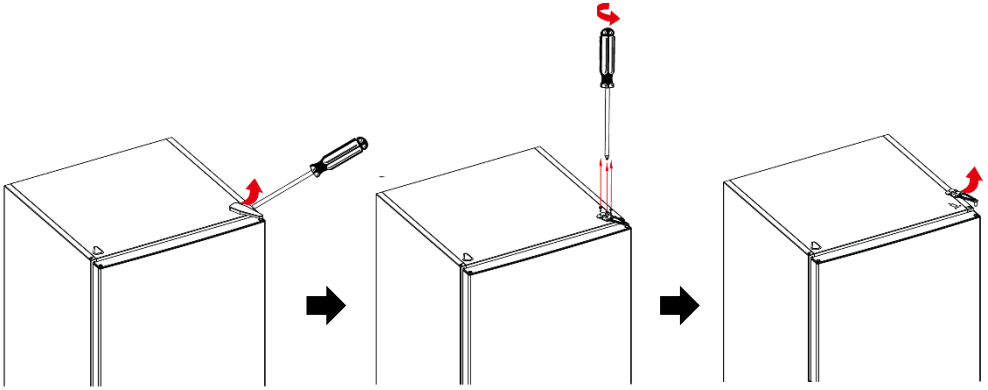

2. Remove the cover that is on the top left of the unit and fix it to the opposite side.

Door Reversal

3. Take off the middle hinge by removing the screws, support the door and remove the hinge and then the door. Place the door on a cushioned surface. Remove the screw cap covers that are on the left of the unit and fix them on to the opposite side

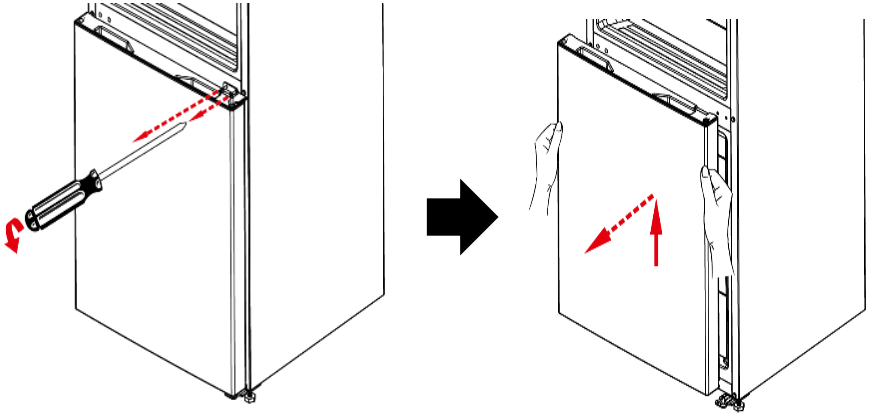

4. Remove the hinge plug from the top of fridge door and fix it to the opposite side. Then remove hinge stopper from the bottom of the freezer door and fix it to the opposite side, ensuring it is fixed securely.

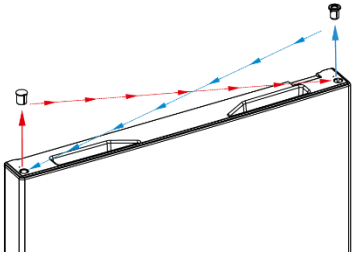

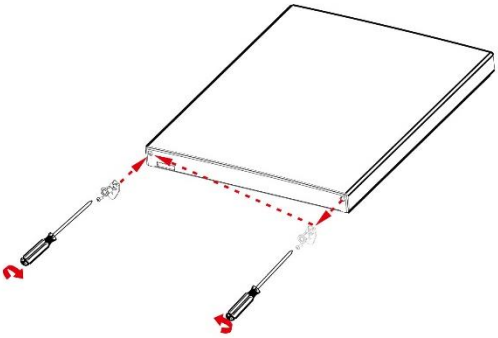

Door Reversal

5. Tilt the appliance carefully, no more 45 degrees and remove the adjustable foot. Take off the bottom hinge by removing the screws. Remove the hinge pin and install it on the opposite side of the hinge. Then reattach the hinge to the left side of the appliance, reinstall the adjustable feet and place the fridge door back on.

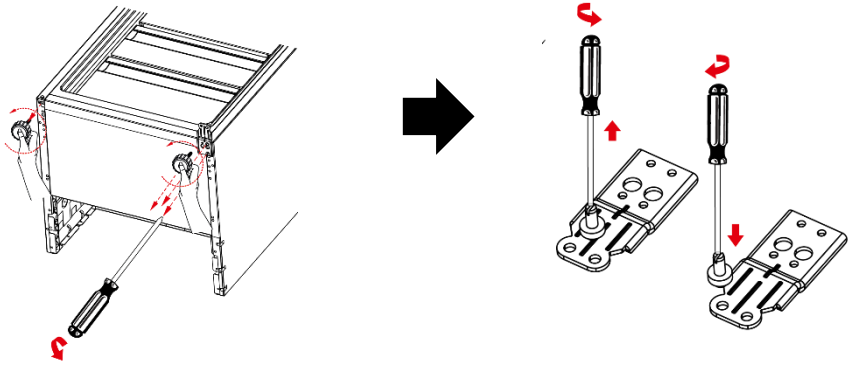

6. Place the fridge door on to the bottom hinge. Flip over the middle hinge (by 180°) and put the bottom pin of the middle hinge into the top of the fridge door and screw the middle hinge back onto the opposite side the fridge. **You must ensure the fridge door is aligned horizontally and vertically, so that the seals are closed on all sides before finally tightening.**

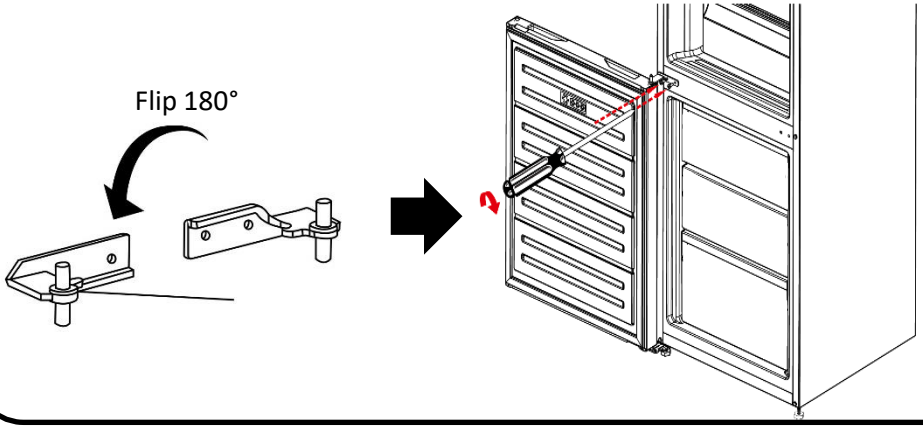

Door Reversal

7. Remove the hinge stopper from the bottom of the freezer door and fix it to the opposite side of the freezer door, ensuring it is fixed securely.

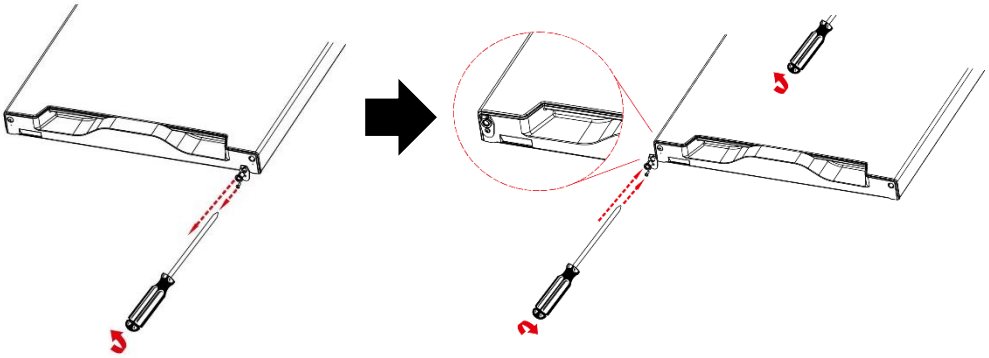

8. Place the freezer door back on to the middle hinge, put the pin of the top hinge into the top of the door and fix the hinge in to place by screwing it to the top of the unit (use a spanner to tighten it if necessary) and replace the hinge cover. **Ensure the freezer door is aligned horizontally and vertically so that the seals are closed on all sides before finally tightening the top hinge.**

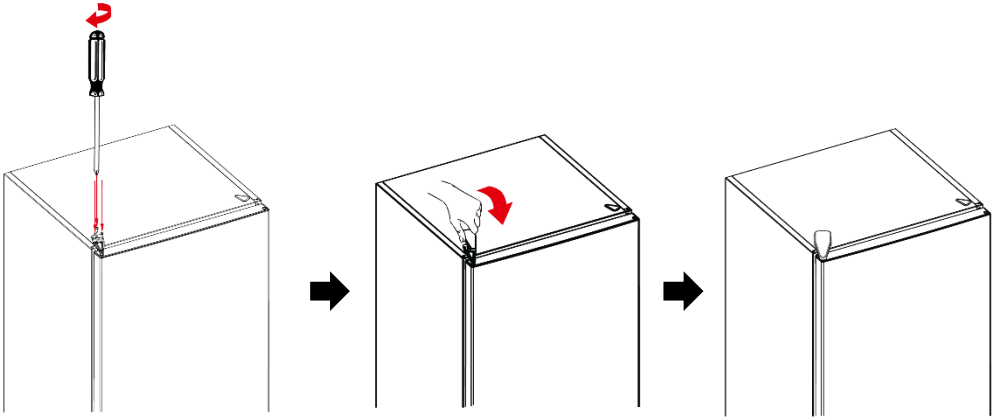

Replacing the Bulb

The light is an energy efficient, long life LED. Therefore should not need replacing throughout the life of the product however if it does it has to be replaced by a qualified engineer.

Please call the service team on **0345 208 8750.**

The following symbol indicates that the light source in this appliance should only be replaced by a qualified engineer:

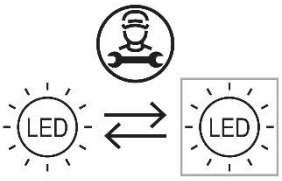

Food Storage Guidelines

Refrigerator compartments	Type of food
Door or balconies of fridge compartment	Foods with natural preservatives, such as jams, juices, drinks, condiments. Do not store perishable foods.
Crisper drawer (salad drawer)	Fruits, herbs and vegetables should be placed separately in the crisper bin. Do not store bananas, onions, potatoes, garlic in the refrigerator.
Fridge shelf – bottom Chiller (box/drawer)	Raw meat, poultry, fish (for short-term storage)
Fridge shelf – middle	Dairy products, eggs
Fridge shelf – top	Foods that do not need cooking, such as ready-to-eat foods, deli meats, leftovers.
Freezer drawer(s)/shelf	Foods for long-term storage. Bottom drawer/shelf for raw meat, poultry, fish. Middle drawer/shelf for frozen vegetables, chips. Top drawer/shelf for ice cream, frozen fruit, frozen baked goods.

Freezer Storage Advice

- Store fresh food in airtight boxes or wrap in bags or foil which are suitable for freezing.
- Do not allow frozen food to come in to direct contact with food to be frozen.
- Pre-frozen food must be placed in the freezer as quickly as possible after purchasing.
- To prevent frost damage to fresh vegetables or fruits they must be processed appropriately before being placed into the freezer compartment.
- You must always follow the storage guidelines printed on all food packaging. However, below is some suggested maximum storage times at -18°C (4 star freezer rating) for a variety of foods:
    - Fresh meat & poultry – up to 12 months
    - Cooked meat – up to 2 months
    - Fresh fish – up to 6 months
    - Fruit & vegetables – up to 12 months
    - Bread & cakes – up to 6 months

Energy Saving Advice

- Do not install the appliance close to sources of heat, such as a cooker, dishwasher or radiator.
- Locate the appliance in a cool well-ventilated room and make sure that the air vents are clear.
- Try to avoid keeping the doors open for a long time, as warm air will enter the cabinet and may cause a build-up of ice as well as affecting the energy consumption. Ensure there are no obstructions preventing the doors from closing properly.
- Ensure that the door seals are clean and there are no tears or splits.
- Keep the most perishable foods, (those with a short shelf-life, such as cooked meats), in the coldest part of the fridge. The Salad Crisper Box is the warmest part of your fridge and should be used for vegetables, salads and fruits etc.
- Do not overload the appliance: the cooling air that circulates and keeps the appliance cold gets blocked, and pockets of warm air form.
- Do not put hot food into the fridge or freezer – let it cool down first.
- The shelves are placed in factory mode this delivers the most energy efficient usage for this appliance.

Power Failure

If there is a power failure during the storage of frozen foods, keep the door closed. If the temperature within your freezer should rise, do not refreeze the food without checking it's condition.

- **Ice Cream:** Once thawed should be discarded.
- **Fruit and Vegetables:** If soft should be cooked and used up.
- **Bread and Cakes:** Can be refrozen without danger.
- **Shellfish:** Should be refrigerated and used up quickly.
- **Cooked Dishes:** i.e. casseroles should be refrigerated and used up.
- **Large Pieces of Meat:** Should be refrigerated and used up quickly
- **Small Joints:** Should be refrigerated and used up quickly
- **Chicken:** Should be refrigerated and used up quickly

Maintenance & Cleaning

Disconnect the appliance from the power supply before cleaning.

Internal Cleaning

- Do not pour water over the appliance.
- The cavity should be cleaned periodically using a solution of bicarbonate of soda and lukewarm water (5ml to 0.5 litre of water)
- Clean the accessories separately with soap and water. Do not put them in the dishwasher.
- Do not use abrasive products, detergents or soaps.
- After washing, rinse with clean water and dry carefully.
- When you have finished cleaning reconnect the plug with **dry hands**.

External Cleaning

- Wash the outer cabinet with warm soapy water. Do NOT use abrasive products.
- There are sharp edges on the underside of the product so care should be taken when cleaning.
- Once or twice a year dust the rear of the appliance and the compressor at the back of the appliance, with a brush or vacuum cleaner, as an accumulation of dust will affect the performance of the appliance and cause increased energy consumption.

When the appliance is not in use

When the appliance is not in use for long periods, disconnect from the electricity supply, empty all of the food and clean the inside. Leave the door open to prevent the build-up of odours.

Maintenance & Cleaning

Defrosting

Note: Care must be taken when performing the following procedure.

- The appliance is frost free, so there shouldn't be any requirement to defrost the freezer. However, in the unlikely event the appliance does need defrosting please follow the below steps:
    - Try to use as much as possible of the food in the freezer, before defrosting. However, any food that is left, wrap in newspaper and place aside until ready to place back after cleaning.
    - Switch the appliance off at the wall socket and remove the plug.
    - Open the freezer door.
    - Place a suitable container to collect the water created from the defrosted ice.
    - Remove the vaporisation container at the rear of appliance (just above the compressor) from its position by removing the screws as indicated. Clean it with soapy water at specific time intervals. This will prevent odours from forming.

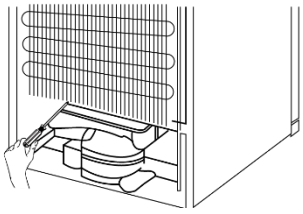

    - After defrosting, clean and dry the interior.
    - Switch the appliance on and replace any frozen food.

Defrosting can be accelerated by putting bowls of hot (not boiling) water in the freezer and loosening the frost with a suitable plastic scraper.

Never use sharp metal tools as it may damage the appliance.

Never use an electrical heater, this may cause an electric shock.

Trouble shooting

Problem	Solution
The fridge/freezer doesn't work	Check that the appliance is switched on.
	Check that there has not been a power cut.
	Check that the plug is not faulty.
	Check that the fuse has not blown.
	Check that the voltage is correct for the appliance.
	Are there any faults with the socket? For this purpose, try the plug of your appliance by connecting it to a socket which you are sure is working.
The temperature inside the appliance is not cold enough	Check that there is not too much food in the appliance.
	Check that the thermostat is set to a suitable temperature.
	Check that the appliance is not placed in direct sunlight, or too near to a heating source.
	Check that the ambient temperature is within the operation limits of the appliance.
	Are the doors of the appliance opened frequently? Once the door is opened, the humidity found in the air in the room enters the appliance, especially if the humidity levels in the room are very high. The more frequently the door is opened in humid conditions the more chance of the build up of moisture.
The temperature within the appliance is too cold.	Increase the working temperature by adjusting the thermostat to a lower setting. The highest setting should only be used as a rapid cool setting and should only be set 2 hours before a large amount of food is placed in the fridge. If this is not done the temperature in the fridge compartment could fall below 0°C as the compressor will run continuously.
The inner surfaces of the appliance are wet	Caused by condensation - dry the inside of the appliance.
The outer surfaces of the appliance are wet	Caused by condensation - dry the outer of the appliance carefully.

Trouble shooting

Problem	Solution
Smell/odour	Check all the food and drink that is in the fridge is in date and correctly packaged. If it isn't then it should be removed immediately or repackaged. Check for spillages on each shelf, rack and drawer. You may need to remove the drawers to check that no spillages have settled underneath them. As spillages that have not been cleaned and have been left can cause smells and unwanted odours.
	Check the drainage pipe is not clogged or the drip tray at the back of the appliance is full. The pipe can be cleared by pouring hot water through, but you must ensure the appliance is turned off, the plug is removed from the socket and a jug or bucket is in place to catch the flow of water.
The doors do not close properly	Ensure there are no obstructions preventing door closure.
	Check the door compartments and shelves are correctly in place.
	Check the door seal is not warped or torn.
	Check the appliance is level.
Unusual noises	Check that the appliance is on a flat, level surface and is stable.
	Check the spacing's around the appliance and ensure it is not touching other items.
	Bubbling and gurgling sound: • This noise is emitted as the coolant fluid flows through the pipes within the system. This is normal.
	Water flowing sound: • This is the normal sound of water flowing into the drain trough during the defrosting process.
	If the appliance is operating noisily (compressor noise): This is normal. This noise indicates that the compressor is operating normally. As the compressor is being energized, it might run a bit more noisily for a short period of time.

Connection to the Mains Supply

WARNING- THIS APPLIANCE MUST BE EARTHED

This appliance is designed to operate from a mains supply of AC220V - 240V; 50HZ. Check that the voltage marked on the product corresponds with your supply voltage.

For UK use only – Plug fitting details (where applicable):
As the colours of the wires in the mains lead of this appliance may not correspond with the coloured markings identifying the terminals in your plug, proceed as follows:

The GREEN/YELLOW wire is the EARTH and must be connected to the terminal which is marked with the letter E or by the earth symbol or coloured GREEN or GREEN/YELLOW.

The BLUE wire is the NEUTRAL and must be connected to the terminal marked with the letter N or coloured BLACK.

The BROWN wire is the LIVE wire and must be connected to the terminal marked with the letter L or coloured RED.

Always ensure that the plug cord grip is fastened correctly.

If a 13A (BS1363) fused plug is used it must be fitted with a 13amp fuse conforming to BS1362 and be BSI or ASTA approved.

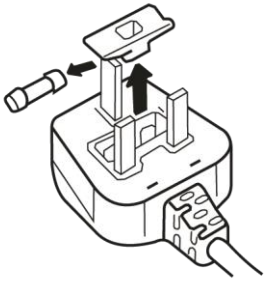

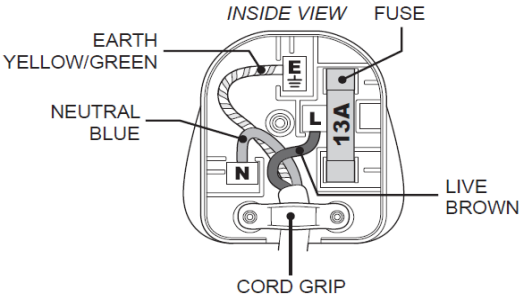

Guarantee

This product is guaranteed for 12 months from the date of the original purchase. If any defect arises due to faulty materials or workmanship you must contact Customer Service with the original proof of purchase so a replacement or refund can be arranged.

Refund or replacement is at the discretion of Customer Service.

The following conditions apply:

- Customer Service will require a valid proof of purchase at the point of replacement or refund.
- The product must be installed and used in accordance with the instructions contained in this instruction guide and any other instructions for use which has been supplied.
- It must be used for domestic purposes only and for its intended use.
- This guarantee does not cover wear and tear, damage, misuse or consumable parts.

This does not affect your statutory rights.

Technical Specification

Model number	RH144TMFF54 (B) (C) (G) (R) (S) (W)
Rated Voltage	220V – 240V ~ 50Hz
Capacity	212L* (171L & 42L)
External Dimensions(HxWxD)	1450mm x 540mm x 570mm

*Fridge and freezer volume can be rounded up, but the total volume must be rounded down. Regulation (EU) 2019/2019 / Regulation: (EU) 2019/2016.

Product Fiche

Model	RH144TMFF54 (B) (C) (G) (R) (S) (W)
Fresh Food Storage Compartment Volume (L)	171L
Frozen Food Storage Volume (L)	42L
Storage Temperature (°C)	0 to 8 / -12 to -26
Energy Consumption (kWh/per year)	222kWh/per year
Energy Consumption (kWh/per year), based on standard test results for 24 hours	
Household Appliance Category	7
Energy Rating	F
Defrosting Type	Static
Climate Class	N/ST
This appliance is intended to be used at an ambient temperature between 16°c and 38°c	
Light Energy Efficiency Class	F
The light source in this appliance should only be replaced by a qualified engineer	
Airborne Acoustical Noise (dB)	41
Temperature Rise Time (h)	9h
Freezing Capacity (kg/24h)	2.6kg/24h
Rated voltage (V)	220V-240V
Rated Current (A)	0.57A
Product Dimensions CMs (H x W x D)	145cm x 54cm x 57cm
Total Storage Volume (L)	212L*
Net Weight (KG)	41.5

*Fridge and freezer volume can be rounded up, but the total volume must be rounded down. Regulation (EU) 2019/2019 / Regulation: (EU) 2019/2016.

Class	Symbol	Ambient temperature range (°C)	Information
Extended temperate	SN	+10 to +32	Extended temperate: 'this refrigerating appliance is intended to be used at ambient temperatures ranging from 10°c to 32°c;
Temperate	N	+16 to +32	Temperate: 'this refrigerating appliance is intended to be used at ambient temperatures ranging from 16°c to 32°c;
Subtropical	ST	+16 to + 38	Subtropical: 'this refrigerating appliance is intended to be used at ambient temperatures ranging from 16°c to 38°c;
Tropical	T	+16 to+ 43	Tropical: 'this refrigerating appliance is intended to be used at ambient temperatures ranging from 16°c to 43°c;

Notes

Russell Hobbs

Russell Hobbs is a registered trademark used under license from Spectrum Brands (UK) Ltd. Made under license by G2S Limited, Wigan, WN2 4AY/G2S (NI) Ltd, Belfast, BT5 5AD.

Russell Hobbs Support: call **0345 208 8750** or visit: mda.russellhobbs.com

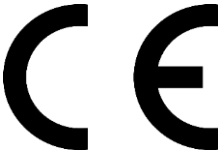

The ‘wheelie bin’ symbol is known as the 'Crossed-out wheelie bin Symbol'. When this symbol is marked on a product/batteries, it means that the product/batteries should not be disposed of with your general household waste. Only discard electrical/electronic/battery items in separate collection schemes, which cater for the recovery and recycling of materials contained within. Your co-operation is vital to ensure the success of these schemes and for the protection of the environment. For your nearest disposal facility, visit www.recycle-more.co.uk or ask in store for details.

SEDEX – Connecting businesses and their global suppliers to share ethical data and enabling improvement in ethical performance. Visit www.sedex.org.uk for further information.

We reserve the right, due to possible changes to design, to alter the instruction manual without prior notice.

Revision 1